HICH
Roof & Property Inspections

The survey specialists...

Property • Infrared • Asbestos • Snagging

H.I.C.H LTD | 6 Mitre Passage | Greenwich Peninsula | London | SE10 0ER

phone 0845 257 0858
email hichinfo@aol.co.uk
website www.hich-ltd.co.uk

ROOF SURVEY

Registered in Scotland | No SC396429

HICH
Roof & Property Inspections

H.I.C.H LTD | 6 Mitre Passage | Greenwich Peninsula | London | SE10 0ER

phone 0845 257 0858
email hichinfo@aol.co.uk
website www.hich-ltd.co.uk

Customer Details

Client Name:	XXXXXX XXXXXXX
Address:	XXXX XXXXXX XXXXXX XXXX XXXX XXXXXX GXX 8XX
Purpose of Report:	ROOF CONDITION SURVEY
Report Reference:	RCS/XXX/2022
Inspection Date:	21st Jan 2022
Surveyor Name:	XXXXX XXXXXX BCI, CII, BDMA, MIOR

Property Image

H.I.C.H LTD | 6 Mitre Passage | Greenwich Peninsula | London | SE10 0ER

phone 0845 257 0858
email hichinfo@aol.co.uk
website www.hich-ltd.co.uk

Type of property: Detached Listed Building

No of bedrooms: N/A

State of repair: Average Condition

Services: Electricity-Mains Water Supply

Tenure: Freehold

Property Age: 1850

General Description of Property (External)

- The property visited was XXXXXXXX XXXX which stands today was not the first house on the site. There was previously a square two storey residence, but this was replaced in 1850, when a mansion house was built for politician and manufacturer Sir James Anderson, Lord Provost of Glasgow from 1848-51 and later MP for Stirling Burghs.
- It was designed by leading Victorian architect J.T. Rochead, who delivered a residence built in the fashionable Scots Baronial style, complete with massive keep, turrets and battlements.
- It is noted within historical documents that over the years, various owners came and went.
- In 1900, the property was bought by Robert Michael Donaldson, and remained with the family until the end of the 1920's.
- The property is of a stone solid construction with multiple main and secondary roof projections, dormer windows and extended areas.
- The main dual pitched roof has a cut timber rafter type supporting structure with a natural slate covering, turrets exist to the south elevation and central west elevation, with bay windows to the south and west elevations.
- Single storey pitched & flat roof extended areas project outwards to the north, west and east elevations.
- Water is discharged from the roof via predominantly OG cast iron rainwater systems with outlet downpipes hold fast fixed to the external elevations.

Findings

A full assessment of the defects listed below revealed that the works itemized in the recommendation listings within the body of this report will be required to return the areas to an industry standard condition, consistent with Construction (Design and Management) Regulations 2007/2015.

H.I.C.H LTD | 6 Mitre Passage | Greenwich Peninsula | London | SE10 0ER

phone 0845 257 0858
email hichinfo@aol.co.uk
website www.hich-ltd.co.uk

Observations & Findings

Main Roof

- The main roof has a dial pitched, gabled slate roof projections to all elevations(natural slate) these appear to be in a good overall structural condition but require maintenance to the mortar areas with missing and damaged slates detected in isolated areas.
- The verges and stepped tabling require maintenance where cracking/missing mortar is evident and common problem with a property of this age.
- Recommend all damaged and missing slates are replaced to maintain the water proof values of the roof coverings, all mortar areas should be replaced and repointed.
- The gutter section rainwater systems require replacement to maintain conditions.

Slipped slates detected at the north facing main roof ridge line

Slipped and missing slates detected to the south east main roof slope

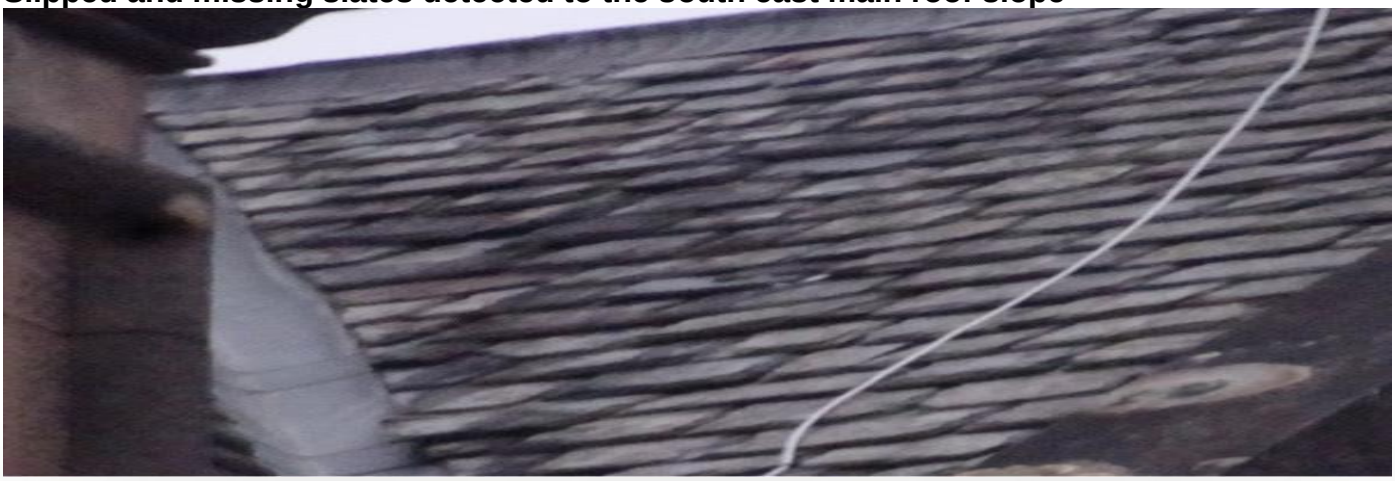

H.I.C.H LTD | 6 Mitre Passage | Greenwich Peninsula | London | SE10 0ER

phone 0845 257 0858
email hichinfo@aol.co.uk
website www.hich-ltd.co.uk

Slipped and missing slates detected to the south east main roof slope at the main valley area

Slipped and missing slates detected to the north west main roof slope at the ridge line

H.I.C.H LTD | 6 Mitre Passage | Greenwich Peninsula | London | SE10 0ER

phone 0845 257 0858
email hichinfo@aol.co.uk
website www.hich-ltd.co.uk

Missing and slipped slates detected to the torrent back gutter and east main roof slope

Mortar skew decay with slipped and missing and detected OG gutters detected to the rear east facing main roof covering

H.I.C.H LTD | 6 Mitre Passage | Greenwich Peninsula | London | SE10 0ER

phone 0845 257 0858
email hichinfo@aol.co.uk
website www.hich-ltd.co.uk

Severe mortar skew cracking and deterioration detected to the north facing main roof slope

Severe open holed areas detected to the main roof slope and skew are at the north east facing slope

H.I.C.H LTD | 6 Mitre Passage | Greenwich Peninsula | London | SE10 0ER

phone 0845 257 0858
email hichinfo@aol.co.uk
website www.hich-ltd.co.uk

Secondary Dormer Roofs

- The property multiple dual pitched slate roof dormers that extend outwards from the north, south east and west main roof slopes (natural slate) these appear to be in good condition but requires maintenance to the mortar areas with missing and damaged slates detected in isolated areas with mortar decay detected to the east low level dormer ridge line..
- Recommend damaged slates are replaced to maintain the water proof values of the roof coverings.
- Also recommend that all ornate timber construction facia roof line and apex panel areas are refurbished to maintain conditions.
- The gutter section rainwater systems require replacement to maintain conditions.

Age related decay and weathering detected to the west facing dormer window wood work

Loose and insecure slates with missing mortar detected to the west facing low level dormer

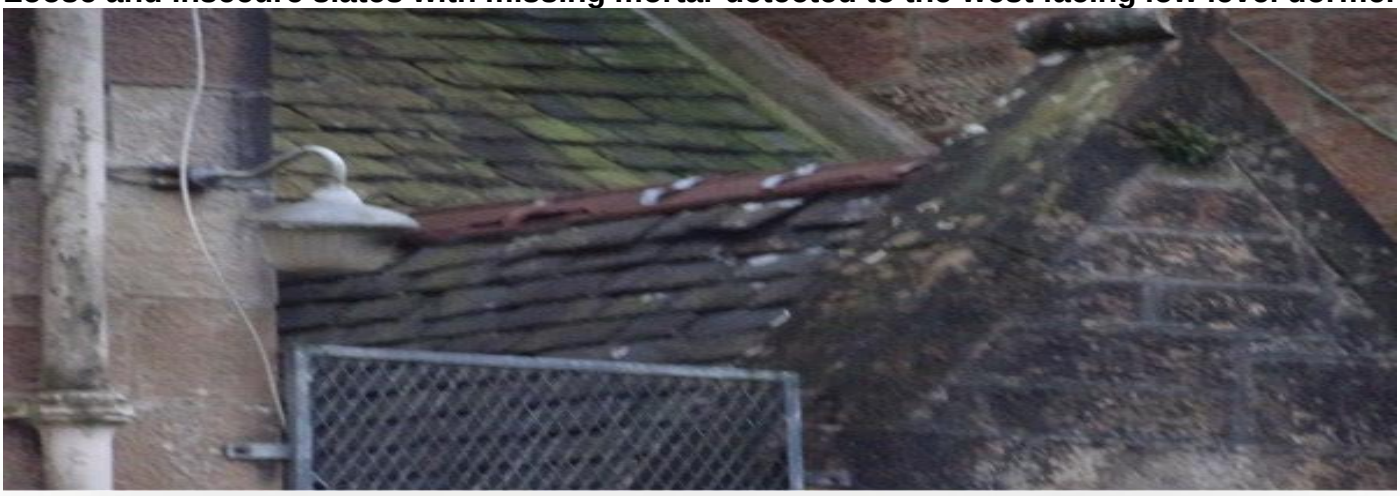

H.I.C.H LTD | 6 Mitre Passage | Greenwich Peninsula | London | SE10 0ER

phone 0845 257 0858
email hichinfo@aol.co.uk
website www.hich-ltd.co.uk

Sever nail sickness detected with loose and insecure slates detected to the south facing dormer window roof slopes

Age related decay detected to the scalloped lead dormer flashings to the west facing dormers

H.I.C.H LTD | 6 Mitre Passage | Greenwich Peninsula | London | SE10 0ER

phone 0845 257 0858
email hichinfo@aol.co.uk
website www.hich-ltd.co.uk

Isolated slipped slates detected to the east facing dormer roof slope at the ridge line

Isolated slipped slates detected to the north facing dormer roof slope at the ridge line

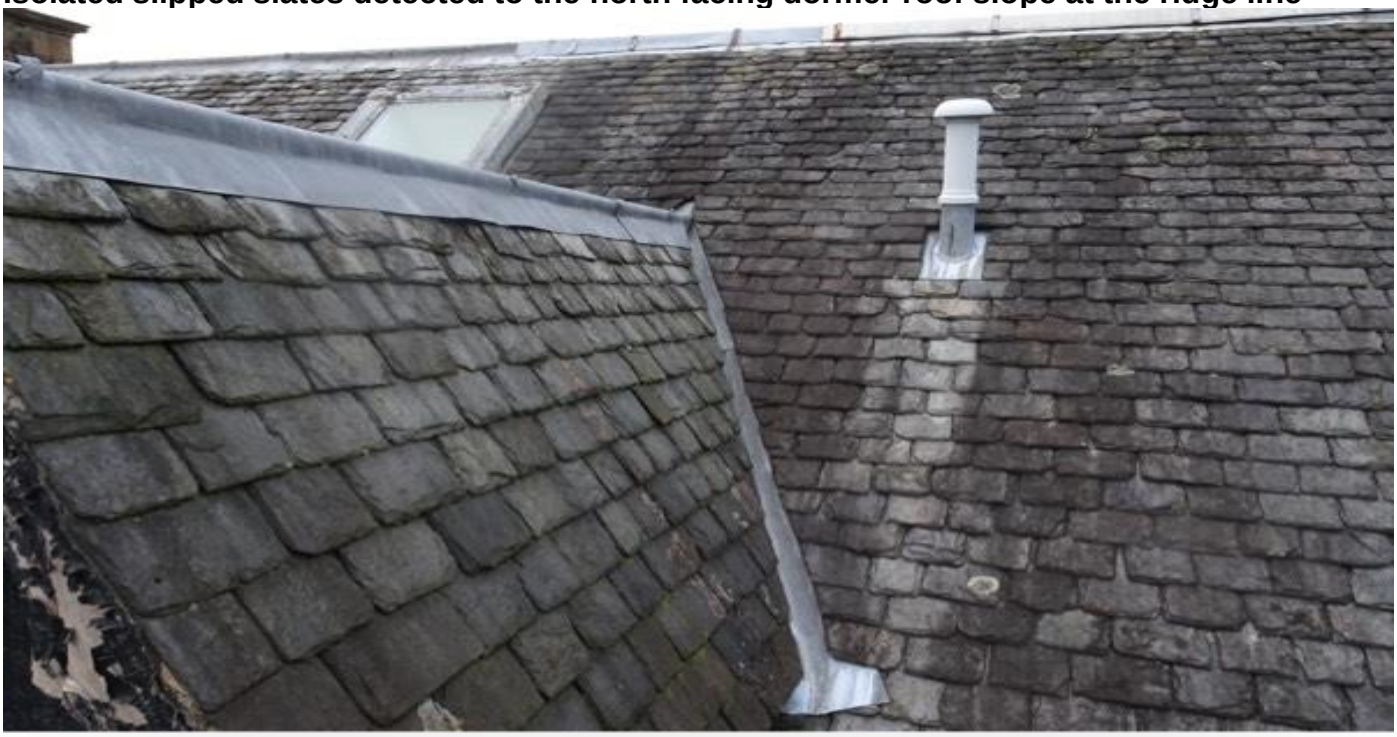

H.I.C.H LTD | 6 Mitre Passage | Greenwich Peninsula | London | SE10 0ER

phone 0845 257 0858
email hichinfo@aol.co.uk
website www.hich-ltd.co.uk

Flat Roof Areas

- The felt flat roofs to the south east roof area show physical evidence of thermal movement and deterioration to the mortar fillets above the roof abutments.
- Recommend these are replaced to prevent water penetration.

- The felt flat roof to the north facing single storey extension area shows physical evidence of thermal movement and deterioration, these appear to be leaking and will now require replacement where cracking/splitting is evident resulting in water penetration.
- Further inspection revealed lead abutment detached areas exposing the roof to water penetration.
- Recommend replacement with a modern EPDM or built up felt system.

- The felt flat roof to the secondary north facing extension area shows physical evidence of thermal movement and deterioration to the abutment flashings and drip bead, these do not appear to be leaking but would benefit from replacement.
- Recommend replacement with a modern EPDM or built up felt system.

Cracked render detected above the lead abutment flashing to the stone parapet wall of the south east flat roof above the main entrance

H.I.C.H LTD | 6 Mitre Passage | Greenwich Peninsula | London | SE10 0ER

phone 0845 257 0858
email hichinfo@aol.co.uk
website www.hich-ltd.co.uk

Holed and cracked mortar fillet noted above the rear lead abutment flashing to the south west flat roof above the main entrance

Detached perimeter lead abutment detected to the north facing rear elevation flat roof

H.I.C.H LTD | 6 Mitre Passage | Greenwich Peninsula | London | SE10 0ER

phone 0845 257 0858
email hichinfo@aol.co.uk
website www.hich-ltd.co.uk

Sagging deck area with stress cracked felt detected to the rear elevation north elevation flat roof

De bonding felt detected to the perimeter parapet wall to the north facing flat roof extension

H.I.C.H LTD | 6 Mitre Passage | Greenwich Peninsula | London | SE10 0ER

phone 0845 257 0858
email hichinfo@aol.co.uk
website www.hich-ltd.co.uk

Open and cracked mortar detected to a historical stone wall crack located above the perimeter lead abutment flashing to the rear elevation north facing flat roof

Surface delaminating detected to the secondary rear north facing flat roof area

H.I.C.H LTD | 6 Mitre Passage | Greenwich Peninsula | London | SE10 0ER

phone 0845 257 0858
email hichinfo@aol.co.uk
website www.hich-ltd.co.uk

North Facing Roof Extension Roof

- The north facing single storey extension has a dual pitched hipped end slate roof (natural slate) this appears to be in good condition but requires maintenance to the mortar skew areas with missing and damaged slates detected in isolated areas.
- The skew abutments require maintenance where cracking/missing mortar is evident and common problem with a property of this age.
- Recommend damaged slates and defective mortar areas are replaced to maintain the water proof values of the roof coverings.

Rear elevation extension pitched hipped slate roof

Slipped slates detected to the rear elevation extension roof

H.I.C.H LTD | 6 Mitre Passage | Greenwich Peninsula | London | SE10 0ER

phone 0845 257 0858
email hichinfo@aol.co.uk
website www.hich-ltd.co.uk

North East facing rear Secondary Single Storey Extension Pavilion Slate Roof

- The extension pavilion roof has a pitched slate covering (natural slate) lead step gulley abutment linked to the rear elevation, the roof covering appears to be in good condition but requires maintenance to the mortar areas with missing and damaged slates detected in isolated areas.
- Recommend damaged slates are replaced to maintain the water proof values of the roof coverings, and all defective mortar areas are repaired to a serviceable standard.

Extension pavilion type slate roof

Perimeter lead gulley to extension pavilion roof

H.I.C.H LTD | 6 Mitre Passage | Greenwich Peninsula | London | SE10 0ER

phone 0845 257 0858
email hichinfo@aol.co.uk
website www.hich-ltd.co.uk

Turret Roofs

- The turret roof located central to the tower and right and left of the south facing front elevation have a scalloped slate covering (natural slate) this appears to be in good condition but requires maintenance to the back gutter areas with missing and damaged slates detected in isolated areas.
- Recommend damaged slates are replaced to maintain the water proof values of the roof coverings and all leaded areas are replaced to maintain conditions and prevent water penetration going forward.

Slipped scalloped slates detected to the south facing turret roof

Slipped and missing slates close to the ridge detected to the south right turret

H.I.C.H LTD | 6 Mitre Passage | Greenwich Peninsula | London | SE10 0ER

phone 0845 257 0858
email hichinfo@aol.co.uk
website www.hich-ltd.co.uk

Lead sheet central turret roof

Central turret roof lead finial insecure set in situ

H.I.C.H LTD | 6 Mitre Passage | Greenwich Peninsula | London | SE10 0ER

phone 0845 257 0858
email hichinfo@aol.co.uk
website www.hich-ltd.co.uk

Stone Bay Windows

- The bay window radius & quadrant roof coverings have a pitched stone roofs (natural stone slate) these appear to be in good condition with no physical defects adversely affecting the water proof values of the roof coverings detected at the time of the inspection

Stone slate radius bay window roof

Stone slopping quadrant bay window roof to the east facing

H.I.C.H LTD | 6 Mitre Passage | Greenwich Peninsula | London | SE10 0ER

phone 0845 257 0858
email hichinfo@aol.co.uk
website www.hich-ltd.co.uk

Central Sloping Roof Areas

- The property has centrally located pitched slate roofs (natural slate) these appear to be in good condition but requires maintenance, with missing evidence of damaged slates detected in isolated areas and lead side slip areas.
- Recommend damaged slates are replaced to maintain the water proof values of the roof coverings.

Slipped slates detected to the central roof slope side slip area

Slipped and missing slates with temporary bitumen tape seal detected to the central roof slope

H.I.C.H LTD | 6 Mitre Passage | Greenwich Peninsula | London | SE10 0ER

phone 0845 257 0858
email hichinfo@aol.co.uk
website www.hich-ltd.co.uk

Timber Defects

- Inspection of the roof timbers was restricted however no visible wood decay was noted to any of the structural timbers and all appeared to be in satisfactory condition.

No evidence of decay detected to the visible roof supporting structures

No evidence of decay detected to the visible roof supporting structures

H.I.C.H LTD | 6 Mitre Passage | Greenwich Peninsula | London | SE10 0ER

phone 0845 257 0858
email hichinfo@aol.co.uk
website www.hich-ltd.co.uk

Conclusions

- A full assessment of the defects listed above revealed Visible Roof Defects, therefore it is recommended that restoration of the roof coverings will be required to return the property to a serviceable industry standard condition, consistent with Construction (Design and Management) Regulations 2007/2015.

- It is our considered opinion that general maintenance to the existing defective areas would not be financially responsible in their present state, and would represent a significant risk to the buildings insurer who potentially may reject any claim made that could be attributed to the gradual process loss.

Recommendations

1) Refurbishment of all Roof Coverings and Replacement of the Rainwater Systems, Water Gates and Flashings.

Follow the link below to find a Local Trusted Contractor

- **https://www.hich-ltd.co.uk/trusted-contractors/**

H.I.C.H LTD | 6 Mitre Passage | Greenwich Peninsula | London | SE10 0ER

phone 0845 257 0858
email hichinfo@aol.co.uk
website www.hich-ltd.co.uk

Buildings Policy Cover Recommendation

- Buildings Cover (standard cover)
- Accidental Damage Cover (additional cover option)
- Trace & Access Cover (additional cover option)

Follow the link below for help with Buildings Insurance

https://www.moneysupermarket.com/home-insurance/guide/

Please see Ref note: fig 1, Ref note: fig 2 below

Ref note: fig 1

https://www.ashbrookroofing.co.uk/blog/key-changes-to-bs5534-code-of-practice-for-slating-and-roofing/

Ref note: fig 2

Introduction to lead sheet in roofing

Lead sheet has long been a key component of roofs. According to the Lead Sheet Association (LSA), about 70% of the lead sheet currently produced is used for flashings and weatherings - the common construction details that protect vulnerable joints in buildings, such as where roofs abut walls. Of the remainder, about half is used as the main roofing material on new developments and the rest is used on restoration projects.

The advantages of lead sheet as a roofing product are that it is long-lasting, weather-resistant and malleable, which is important as flashing and other details need to be formed around the contours of the roof and movement joints in buildings.

To optimise the performance of lead sheet, however, it is essential that it is correctly specified and installed. Housing warranty provider the National House-Building Council (NHBC) estimates that claim costs relating to pitched roofs on new-build homes are in excess of £16m a year.

H.I.C.H LTD | 6 Mitre Passage | Greenwich Peninsula | London | SE10 0ER

phone 0845 257 0858
email hichinfo@aol.co.uk
website www.hich-ltd.co.uk

The Lead Sheet Association and NHBC have collaborated to develop this CPD, which will focus on some of the common problems and concerns that can occur when using lead in house building, conversions or extensions.

Further explanation of the best approaches to using lead sheet on roofing applications can be found in the LSA publication Rolled Lead Sheet - The Complete Manual, as well as the NHBC Standards 2013.

ABUTMENTS AND CHIMNEYS

Roofs can be particularly vulnerable to damage and water ingress at junctions such as where walls meet pitched roofs or bay window roofs. Careful detailing can ensure high-quality performance.

Flashings and soakers

All abutments should be weathered using lead. Lead flashings should be a minimum of code 4 and should not exceed 1.5m in length, with laps of not less than 100mm.
Soakers are used where a slated or double-lap plain tiled pitched roof abuts a wall. They are normally made from code 3 lead sheet, colour-coded green (see image A below).

Flashing should be tucked into a mortar joint with a minimum depth of 25mm and at least 100mm above the roof tiling level for step flashing. To avoid damage to damp-proof courses (DPCs) and cavity trays, the joint for lead flashings should be raked out as work proceeds. The joint should then be pointed in cement mortar or using suitable exterior-grade sealant in accordance with the manufacturer’s recommendations.

H.I.C.H LTD | 6 Mitre Passage | Greenwich Peninsula | London | SE10 0ER

phone 0845 257 0858
email hichinfo@aol.co.uk
website www.hich-ltd.co.uk

As an alternative, the flashings can be built in as the work proceeds. They should be built in to a depth of 50mm and a welted edge should be provided to form a key with the mortar. Cutting out the joint once the mortar has hardened is likely to cause damage to DPCs and cavity trays, leading to water penetration.

When installing flashings around chimneys, it is important that they should link with the chimney DPC trays. A chimney DPC is especially necessary where moisture penetration would be visually unacceptable and could damage the structure below, or both (see image B and C). All lead DPCs should be coated with black oil-based bitumen paint on both sides to protect the lead sheet from the corrosive elements in Portland cement and lime mortar.

Flashings or soakers should also be used where there is a change in roof slope of 5° or more, for example at mansards and sprockets. A saddle flashing should be used where a ridge meets the main roof.

Soakers or a secret gutter should be installed at abutments where slates, flat interlocking tiles or plain tiles are used.

Image A: This image shows a tiled roof with soakers, used where a slated or double-lap plain tiled pitched roof abuts a wall

H.I.C.H LTD | 6 Mitre Passage | Greenwich Peninsula | London | SE10 0ER

phone 0845 257 0858
email hichinfo@aol.co.uk
website www.hich-ltd.co.uk

Image B: A chimney DPC is especially necessary where moisture penetration would be visually unacceptable and could damage the structure below

Image C: This image shows a chimney DPC, with correctly detailed step flashing, a back gutter and a front apron

H.I.C.H LTD | 6 Mitre Passage | Greenwich Peninsula | London | SE10 0ER

phone 0845 257 0858
email hichinfo@aol.co.uk
website www.hich-ltd.co.uk

Cavity trays

Cavity trays are designed to divert water within a cavity wall out through the external skin. They should be linked and dressed over the flashing at abutments to prevent water penetrating the enclosed area. This is necessary in situations where:

- a flat or pitched roof over an enclosed area abuts a wall
- a balcony abuts a wall.

Where a pitched roof abuts the wall at an angle, a stepped cavity tray linked to a stepped flashing should be used. Stepped flashings should be cut from a strip of lead at least 150mm wide.

Where a bay window roof meets a wall, horizontal cavity trays with stop ends should be used above the abutment. The trays should link with vertical DPCs to the window reveals or any stepped trays below. Where the wall is fair-faced masonry, weep holes should also be provided at maximum 450mm intervals.

Preformed stepped trays should be provided to each sloping roof abutment with the lowest tray extending beyond and linking with the vertical DPCs to the window reveals. The lowest stepped cavity tray should be fitted with two stop ends and a weep hole in all cases.

Bay window with stepped cavity tray

H.I.C.H LTD | 6 Mitre Passage | Greenwich Peninsula | London | SE10 0ER

phone 0845 257 0858
email hichinfo@aol.co.uk
website www.hich-ltd.co.uk

Thickness of lead sheet

Lead sheet is supplied in standard widths of 3m and 6m to builder's merchants, and other sizes are available to order. The BS EN 12588 codes for lead sheet thickness are shown in the table below:

	Code 3	Code 4	Code 5	Code 6	Code 7	Code 8
Weight per m2 (kg)	14.97	20.41	25.40	30.05	35.72	40.26
Thickness (mm)	1.32	1.80	2.24	2.65	3.15	3.55
Colour coding	Green	Blue	Red	Black	White	Orange

PITCHED VALLEYS AND GUTTERS

Valleys are formed at the junction between two pitches to carry water off the roof. The size of the valley should be calculated in relation to the roof area that it is drawing water from.

Lead-lined valleys can be code 4 (colour-coded blue), 5 (red) or higher if required, depending on exposure. Code 4 or 5 lead in valleys should be laid in lengths not exceeding 1.5m; higher codes may be laid in lengths of up to 2m, where the valleys are not bedded and fitted in code 7 and above. Laps between pieces are related to the valley pitch - for example, 150mm for gutter pitches of 30°, increasing to 220mm when the gutter pitch is 20° (see figure 1, taken from the Rolled Lead Sheet Manual, below).

Figure 1. Recommended laps of different valley pitches

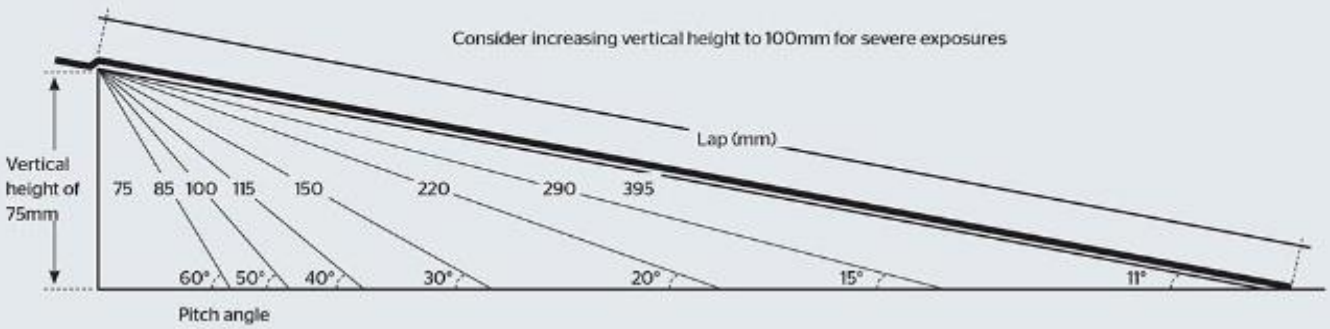

H.I.C.H LTD | 6 Mitre Passage | Greenwich Peninsula | London | SE10 0ER

phone 0845 257 0858
email hichinfo@aol.co.uk
website www.hich-ltd.co.uk

An example of a pitched valley gutter to a slate roof fitted in 1.5m lengths

If tiles are be cut and bedded, it is important to leave a clear 25mm channel behind the bedding to allow any water that may penetrate to run freely and discharge into the eaves gutter. The mortar should be bedded on an under cloak (for example, slate) to prevent direct contact between the lead and the mortar. Mortar should not bridge the welt detail.

For un-bedded valleys the cut edge of the tiles or slates should extend not less than 50mm over the tilting fillet.

Lead saddle flashings and other weatherings should be used at intersections and abutments. Lead flashings should be a minimum of code 4.

H.I.C.H LTD | 6 Mitre Passage | Greenwich Peninsula | London | SE10 0ER

phone 0845 257 0858
email hichinfo@aol.co.uk
website www.hich-ltd.co.uk

DORMER WINDOWS

Lead sheet is widely used to weather dormers. As designs vary considerably, the detailing of the lead-work used to clad them needs careful consideration in order to avoid water ingress into the roof.

A fully projecting dormer is the most common type, although there can be many variations in design. For all dormers, leadwork will broadly comprise the weathering of the sill, jambs, in some cases the soffit, the cladding of the cheeks (including the junction with the roof covering) and the weathering of the dormer top.

For roofs covered with single lap tiles, the lead side flashings should not exceed 1.5m in length and be lapped to suit roof pitch.

Where the roof is covered with double lap plain tiles, soakers are used with up stands a minimum of 100mm. For lead covered roofs, the narrow bay on each side of the dormer is turned up against the cheek.

Full details on the weathering of dormers can be found in the LSA manual from pp172-191. You can also find more information at:

- www.leadsheet.co.uk
- www.nhbc.co.uk

Potential for Insurance recovery.

The faults noted and detailed within this report may be viewed in a negative manner by your home insurance provider and could potentially prejudice any claim or future claim made, resulting in your claim being rejected, if the proximate cause of any loss can/could be associated to poor workmanship/materials or gradual process loss (wear & tare)

Buildings Policy Cover Recommendation

- Buildings Cover (standard cover)
- Accidental Damage Cover (additional cover option)
- Trace & Access Cover (additional cover option)

Health and Safety

Asbestos fibres were included in many different types of building materials, and may be released when these materials are damaged, disturbed or otherwise exposed. These fibres can cause a hazard to health when inhaled. If there is a risk that any work activity that intrudes beyond the surface finish of this building may potentially expose or disturb asbestos fibres and thereby create

H.I.C.H LTD | 6 Mitre Passage | Greenwich Peninsula | London | SE10 0ER

phone 0845 257 0858
email hichinfo@aol.co.uk
website www.hich-ltd.co.uk

a potential health hazard. Persons or organisations carrying out these activities are advised to conduct appropriate risk assessment in order to identify and control these hazards.
For Example:

- Corrugated roofing, tiles, 'slates', soffits, gutters, downpipes, walls and panels;
- Insulation under the roof, on beams and stanchions;
- Boards and panels, and any insulation between these;
- Insulation around pipes, on a heater, boiler, calorifier, in storage heaters;
- Decorative coatings on walls or ceilings;
- Insulation around windows;
- Water cistern;
- Flues, waste water pipes;
- Plastic floor tiles.
- Textured Coatings (ARTEX) etc.
- Bitumen

If instructed we will take a representative sample of a potential Asbestos containing material for analysis

Limitations to Survey/Terms & Conditions

Our report on the services installations will be based on a cursory inspection only in order to include a general description. We will not test any installations. Unless otherwise instructed, we will not commission the inspection or testing of any installations by specialist contract engineers. If we find visual evidence to suggest that there may be problems with any installations in part or in whole, or if they are particularly sophisticated or complex, we will advise you accordingly, and make recommendations for further investigations or testing by specialists

This was a non-intrusive inspection and limited to commenting upon the extent of damage noted and inspected during the visible inspection at that time.

Based on an inspection as defined below, the surveyor will advise the client by means of a written report as to his opinion of the visible condition and state of repair of the subject property.

The surveyor will inspect as much of the surface area of the structure as is possible but will not inspect those areas which are covered, unexposed or inaccessible.

The surveyor will inspect the roof spaces if there are available hatches. The surveyor will have a ladder of sufficient height to gain access to a roof hatch or roof area not more than 5m above ground level. It may therefore not be possible to inspect roofs above this level without a suitable scaffold or access platform. In such cases pitched roofs, may be inspected with the aid of zoom

H.I.C.H LTD | 6 Mitre Passage | Greenwich Peninsula | London | SE10 0ER

phone 0845 257 0858
email hichinfo@aol.co.uk
website www.hich-ltd.co.uk

Optics. The surveyor will follow the guidance given in surveying safety issued by RICS in April 1991.

This incorporates the guidance given in Guidance note GS31 on the safe use of ladders and step ladders issued by the Health & Safety Executive.

The surveyor will assume that the property is not subject to any unusual or especially onerous restrictions or covenants which apply to the structure or affect the reasonable enjoyment of the property.

The surveyor will assume that all bylaws, building regulations and other required consents have been obtained. The surveyor will not verify whether any such consents, have been obtained. The client and his/her legal advisors should make all necessary enquiries. Drawings-specifications will not be inspected by the surveyor.

The surveyor will assume is unaffected by any matters which would be revealed by a local search (or the equivalent) and reply's, to the usual enquiries, or by a statutory notice and that neither the property, It's condition, its use, or its intended use, is or will be unlawful.)

The client will pay the surveyor the agreed fee for the report and any expressly agreed disbursements in addition.

The report is for the sole use of the named client and is confidential to the client and his/her professional advisors. Any other parties rely on the report at their own risk. The report must not be reproduced, in whole or in part, without the prior written consent, of the surveyor.

Note: A building survey report does not automatically include advice upon value or a reinstatement cost assessment/replacement for insurance Purposes. However, the surveyor will be prepared to provide such opinions-assessments if these are agreed from the outset.